76 & BURGER KING

MORGAN HILL, CALIFORNIA 95037

APN: 728-37-024

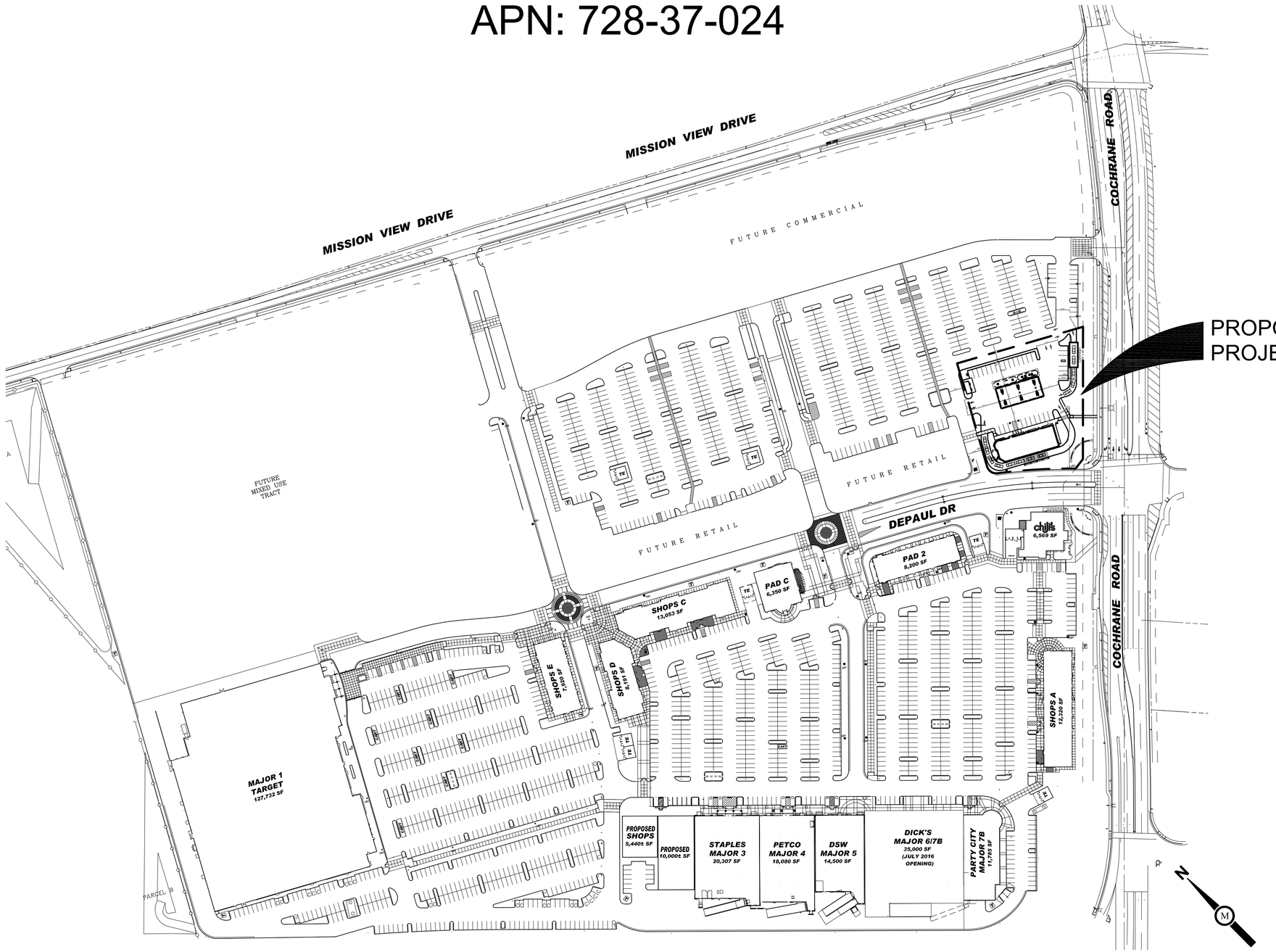

OVERALL SHOPPING CENTER SITE PLAN

CITY OF MORGAN HILL

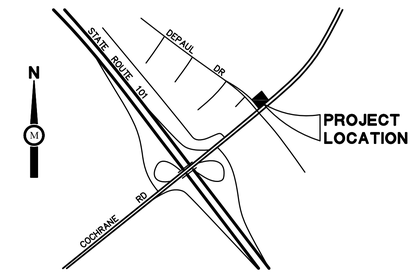

VICINITY MAP
NOT TO SCALE

LOT DATA:

PARCEL SIZE:	PAD "K" 57,141 SF (1.31 AC)
ZONED:	PUD - PLANNED UNIT DEVELOPMENT
EXISTING USE:	VACANT - UNDEVELOPED
PROPOSED USE:	FUEL STATION/RESTAURANT

APPLICANT

COCHRANE CO-BRANDS, INC.
CONTACT: SUNNY GHAI
1904 VIA DI SALERNO
PLEASANTON, CA 94566
PHONE: (510) 333-7802

PROPERTY OWNER

MORGAN HILL RETAIL VENTURES L.P.
1007 COCHRANE RD
MORGAN HILL, CA 95037
PHONE: (408) 778-5079

Milestone Associates
Imagineering
a California Corporation
1000 LINCOLN ROAD, SUITE H202
YUBA CITY, CALIFORNIA 95991
TEL: 530-755-4700
FAX: 530-755-4567

JULIO J. TINAJERO
PROJECT MANAGER

STAMP:

SUBMITTAL DATE	
PLANNING DEPT:	.
BUILDING DEPT:	.
PUBLIC WORKS:	.
SURVEY:	.

REVISIONS

No.	Description	Date

OVERALL SHOPPING CENTER SITE PLAN

76 & BURGER KING
COCHRANE COMMONS
1107 COCHRANE ROAD
MORGAN HILL, CA 95037
A.P.N. 728-37-024

DATE: 08-29-16
SCALE: 1" = 100'
DRAFTER: STAFF
JOB NUMBER: 15-915

SHEET: DD0

15-915-DD1.0-SITE PLAN.DWG JT 08-27-16

ALL DRAWINGS AND WRITTEN MATERIAL APPEARING HEREIN CONSTITUTE THE ORIGINAL AND UNPUBLISHED WORK OF MILESTONE ASSOCIATES IMAGINEERING, INC., AND THE SAME MAY NOT BE DUPLICATED, USED OR DISCLOSED WITHOUT THE WRITTEN CONSENT OF MILESTONE ASSOCIATES IMAGINEERING, INC. ©2016 MILESTONE ASSOCIATES IMAGINEERING, INC. ALL RIGHTS RESERVED.

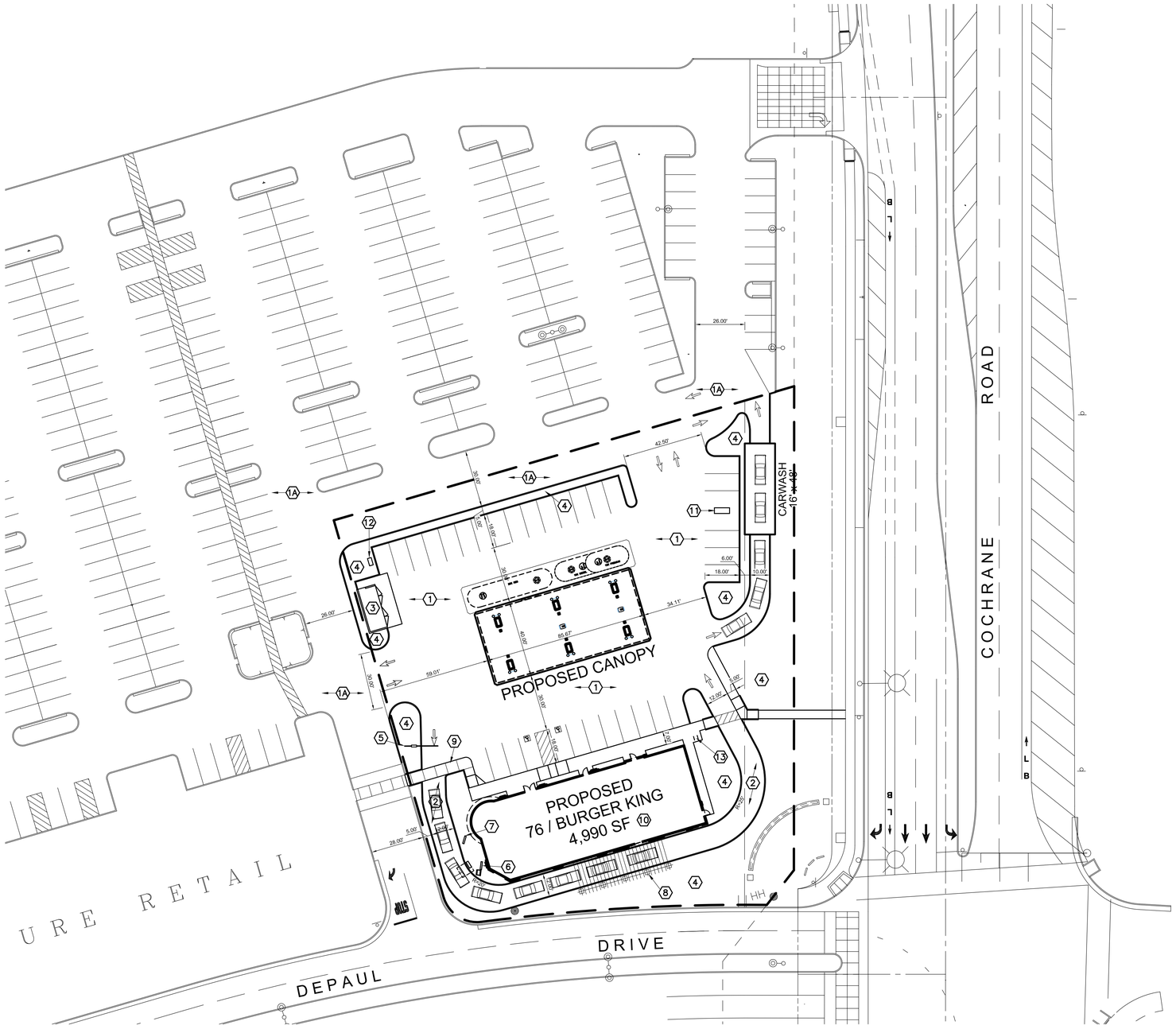

SITE PLAN

CONSTRUCTION NOTES

1. NEW ASPHALT CONCRETE PAVEMENT
1A. EXISTING ASPHALT PAVEMENT TO REMAIN
2. NEW PORTLAND CEMENT CONCRETE PAVEMENT
3. NEW TRASH ENCLOSURE
4. NEW LANDSCAPE AREA
5. NEW CLEARANCE SIGN
6. NEW MENU ORDER BOARD
7. NEW PRE-ORDER BOARD
8. NEW WOOD TRELLIS WITH STUCCO COLUMNS AT PICK UP WINDOW
9. NEW STAMPED CONCRETE (MATCH SHOPPING CENTER) PEDESTRIAN CROSS ACCESS PATH OF TRAVEL
10. NEW ROOF TOP EQUIPMENT WILL BE SCREENED FROM PUBLIC VIEW.
11. NEW VACUUM STATION
12. NEW AIR / WATER STATION
13. NEW BIKE RACK. SEE DETAIL THIS SHEET.

LOT DATA:

PARCEL SIZE:	PAD "K" 57,141 SF (1.31 AC)
ZONED:	PUD - PLANNED UNIT DEVELOPMENT
EXISTING USE:	VACANT - UNDEVELOPED
PROPOSED USE:	FUEL STATION/RESTAURANT

SITE COVERAGE:

BUILDING COVERAGE:	4,990 SF (8.8%)
CARWASH COVERAGE:	768 SF (1.3%)
LANDSCAPE AREA:	7,000 SF (12.2%)
PAVED SURFACE AREA:	44,373 SF (77.7%)

PARKING DATA:

REQUIRED:

CONVENIENCE STORE (2066 SF/250)	= 8 SPACES
BURGER KING RESTAURANT (2510 SF/100)	= 25 SPACES
CARWASH	= 5 SPACES
REQUIRED:	38 SPACES

PROVIDED:

STANDARD SPACE (9'x18')	32 SPACES
DRIVE THRU LANE	9 SPACES
ACCESSIBLE SPACE (9'x18')	2 SPACES
PROVIDED:	43 SPACES

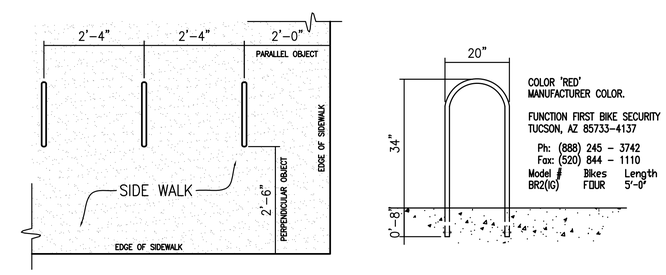

PLAN VIEW

ELEVATION

BIKE RACK DETAIL

N

SCALE 1" = 30'
0 30 60

Milestone Associates
Imagineering
a California Corporation

1000 LINCOLN ROAD, SUITE H202
YUBA CITY, CALIFORNIA 95991

TEL: 530-755-4700
FAX: 530-755-4567

JULIO J. TINAJERO
PROJECT MANAGER

STAMP:

SUBMITTAL DATE	
PLANNING DEPT:	.
BUILDING DEPT:	.
PUBLIC WORKS:	.
SURVEY:	.

REVISIONS		
No.	Description	Date

SITE PLAN

76 & BURGER KING
COCHRANE COMMONS
1107 COCHRANE ROAD
MORGAN HILL, CA 95037
A.P.N. 728-37-024

DATE: 08-29-16

SCALE: 1" = 30'

DRAFTER: STAFF

JOB NUMBER: 15-915

SHEET:

DD1

15-915-001.0-SITE PLAN.DWG JT 08-27-16

ALL DRAWINGS AND WRITTEN MATERIAL APPEARING HEREIN CONSTITUTE THE ORIGINAL AND UNPUBLISHED WORK OF MILESTONE ASSOCIATES IMAGINEERING, INC., AND THE SAME MAY NOT BE DUPLICATED, USED OR DISCLOSED WITHOUT THE WRITTEN CONSENT OF MILESTONE ASSOCIATES IMAGINEERING, INC. ©2016 MILESTONE ASSOCIATES IMAGINEERING, INC. ALL RIGHTS RESERVED.

WALL TYPES

1 HOUR FIRE RATED WALL (INSULATED):
(PER GA FILE NO. WP 3510.)
EXTERIOR SIDE-
PORTLAND CEMENT/SAND STUCCO MIX: 1:4 SCRATCH COAT 1/2" THICK. 1:5 BASE COAT 3/8" THICK APPLIED OVER 3.4# METAL LATH FASTENED THROUGH ONE LAYER OF STRUCTURAL PLYWOOD (AS REQUIRED BY PLANS) APPLIED PARALLEL TO OR AT RIGHT ANGLES WITH 1 1/2" ROOFING NAILS SPACED 6" O.C. INTO 2"X6" WOOD STUDS @ 16" O.C.

INTERIOR SIDE-
ONE LAYER 5/8" TYPE X GYPSUM WALLBOARD OR VENEER BASE APPLIED PARALLEL OR AT RIGHT ANGLES TO WOOD STUDS WITH OR WITHOUT INSULATION IN STUD CAVITY. TO UNDERSIDE OF ROOF SHEATHING TIGHTLY AROUND ALL PENETRATIONS, INCLUDING BUT NOT LIMITED TO ROOF TRUSSES, AND THOROUGHLY CAULK ALL JOINTS AND GAPS.

INTERIOR WALLBOARD TO BE INSTALLED AT TIME OF TENANT IMPROVEMENTS, IF DEFERRED BY CITY.

BALLOON FRAMED WALL - 2x6 @ 16" O.C.
EXTERIOR - 1/2" OSB WITH 7/8" NOMINAL 3 COAT CEMENT PLASTER FINISH.

INTERIOR - UNFINISHED

INTERIOR WALL - 2x6 @ 16" O.C.
W/ 1/2" TYPE "X" GYPSUM WALLBOARD
W/ R-19 BATT INSULATION.

GENERAL NOTES

1. ALL DIMENSIONS ARE TO FACE OF STUD, U.O.N.
2. MOUNT DOOR CLOSER'S ON INTERIOR SIDE ONLY. ACCESSIBLE DOORS WITH CLOSER TO HAVE A 3 SECOND SWEEP FROM AN OPEN 70 DEGREES TO A POINT OF 3 INCHES FROM THE LATCH. (PER CBC 1133.2.5.2).
3. SAFETY GLAZING SHALL HAVE PERMANENT LABELS/IDENTIFICATION.
4. MAIN ENTRANCE DOOR IS TO HAVE A STICKER ABOVE DOOR STATING "DOOR MUST REMAIN UNLOCKED DURING BUSINESS HOURS." (PER C.B.C. 1003.3.1.8, EXCEPTION 1.)
5. FOR TYPICAL WALL FRAMING SEE DETAILS SEE SHEET S5.0.
6. PENETRATIONS THROUGH 1-HOUR WALL TO BE PROTECTED WITH METACAULK FIRE RATED MORTAR.
7. NO CEILING IS PROPOSED IN FIRE ROOM, ELECTRICAL ROOM, OR TELEPHONE ROOM. REFER TO TENANT IMPROVEMENT PLANS (BY OTHERS) FOR CEILING, IF ANY, IN THESE ROOMS.
8. THE FIRE CONTROL ROOM MAY CONTAIN OTHER BUILDING SERVICE EQUIPMENT, HOWEVER, EQUIPMENT CAN NOT BE WITHIN 3' IN FRONT OF ANY FIRE EQUIPMENT IN THE ROOM.

KEY NOTES

(X) DENOTES WINDOW TYPE. SEE WINDOW SCHEDULE SHEET A1.1

(X) DENOTES DOOR TYPE, SEE DOOR SCHEDULE SHEET A1.1

(1) WALL MOUNTED ROOF ACCESS LADDER. SEE DETAIL 5/A6.2

(2) ALARM CONTROL PANEL LOCATION (BY OTHERS)

(3) FIRE SPRINKLER RISER. THE FIRE SPRINKLER RISER SHALL BE LOCATED ON THE OUTSIDE WALL BETWEEN 12" AND 18" FROM THAT OUTSIDE WALL AND AT LEAST 12" FROM ANY OTHER WALL.

(4) FIRE SYSTEM CONTROL VALVE

(5) KNOX BOX. A KEY SHALL BE LOCATED WITHIN AN APPROVED HIGH LEVEL FIRE DEPARTMENT KNOX COMPANY KEY BOX LOCATED ADJACENT TO THE ACCESS DOOR ON THE EXTERIOR OF THE BUILDING AT 6' ABOVE FINISHED FLOOR.

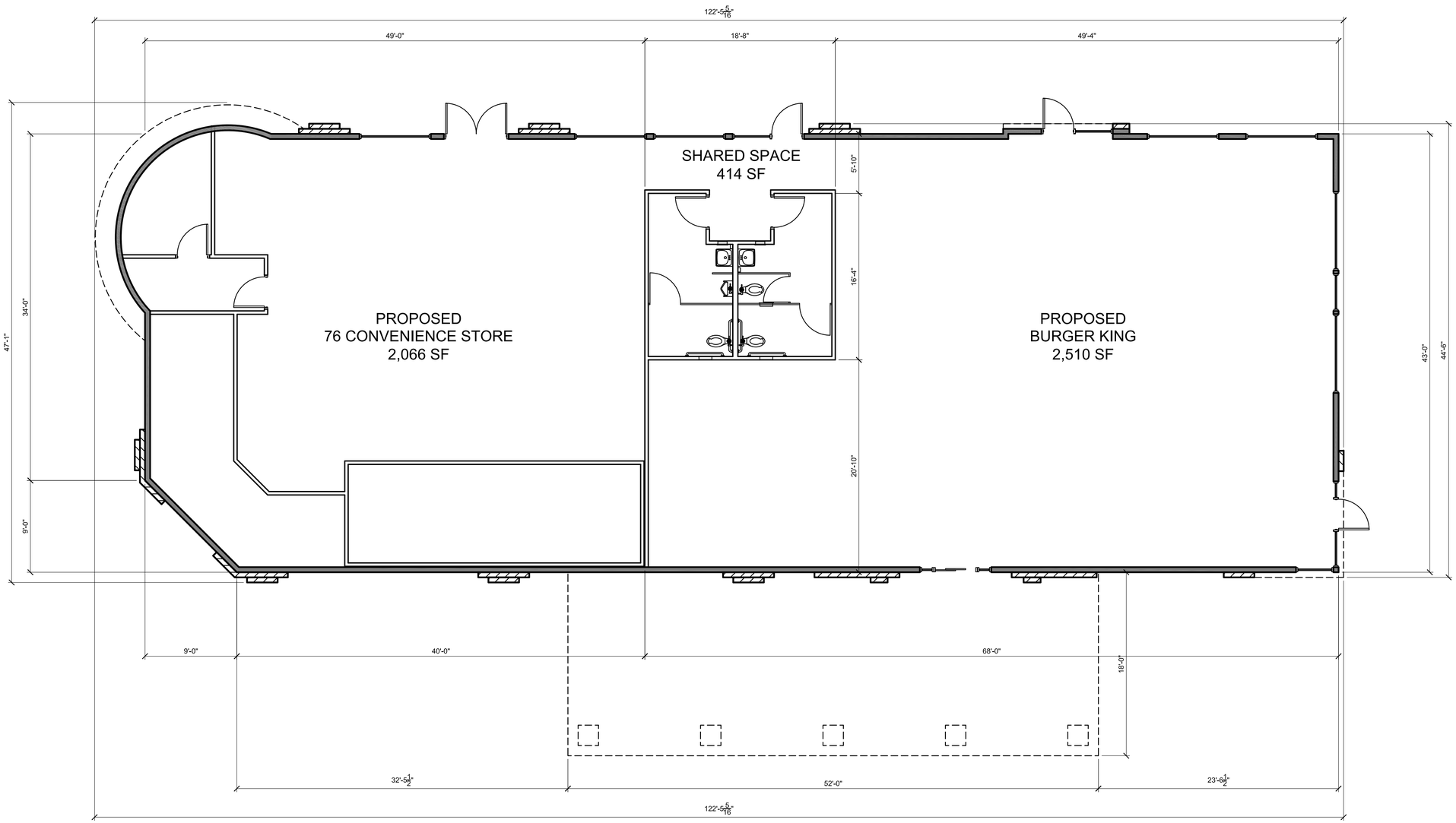

N

FLOOR PLAN (4,990 SF)

3/16" = 1'-0" | 1

ALL DRAWINGS AND WRITTEN MATERIAL APPEARING HEREIN CONSTITUTE THE ORIGINAL AND UNPUBLISHED WORK OF MILESTONE ASSOCIATES IMAGINEERING, INC., AND THE SAME MAY NOT BE DUPLICATED, USED OR DISCLOSED WITHOUT THE WRITTEN CONSENT OF MILESTONE ASSOCIATES IMAGINEERING, INC. ©2016 MILESTONE ASSOCIATES IMAGINEERING, INC. ALL RIGHTS RESERVED.

15-915-003.0-FLOOR PLAN.DWG JT 08-29-16

Milestone Associates
Imagineering
a California Corporation

1000 LINCOLN ROAD, SUITE H202
YUBA CITY, CALIFORNIA 95991

TEL: 530-755-4700
FAX: 530-755-4567

JULIO J. TINAJERO
PROJECT MANAGER

STAMP:

SUBMITTAL DATE

PLANNING DEPT: .
BUILDING DEPT: .
PUBLIC WORKS: .
SURVEY: .

REVISIONS

No.	Description	Date

FLOOR PLAN

76 & BURGER KING
COCHRANE COMMONS
1107 COCHRANE ROAD
MORGAN HILL, CA 95037
A.P.N. 728-37-024

DATE: 08-29-16
SCALE: 3/16" = 1'-0"
DRAFTER: STAFF
JOB NUMBER: 15-915

SHEET:
DD2.0

WATERPROOFING:

A. TOP NAILING AT PARAPET CAP FLASHING WILL NOT BE ACCEPTED.
B. PENETRATIONS IN ROOFING MEMBRANE AND FLASHING SHALL ONLY BE MADE AS INDICATED ON THE DRAWINGS OR SPECS.
C. SEALANT PER MANUFACTURER'S SPECIFICATIONS.
D. ALL SHEET MTL FLASHING SHALL BE 22 GA MIN.

MISCELLANEOUS:

A. ROOF PENETRATIONS CLOSER THAN 12" FROM ANOTHER WILL NOT BE ALLOWED.
B. EXHAUST FANS MIN. 10'-0" AWAY FROM ALL AIR INTAKE / SUPPLY.

KEYNOTES:

2 FABRIC AWNING
4 ROOF DRAIN
5 ROOF CRICKET
6 CANT STRIP
9 OVERFLOW DRAIN
10 PARAPET CAP TO BE SLOPED FOR POSITIVE DRAINAGE. DRAIN TOWARDS ROOF.

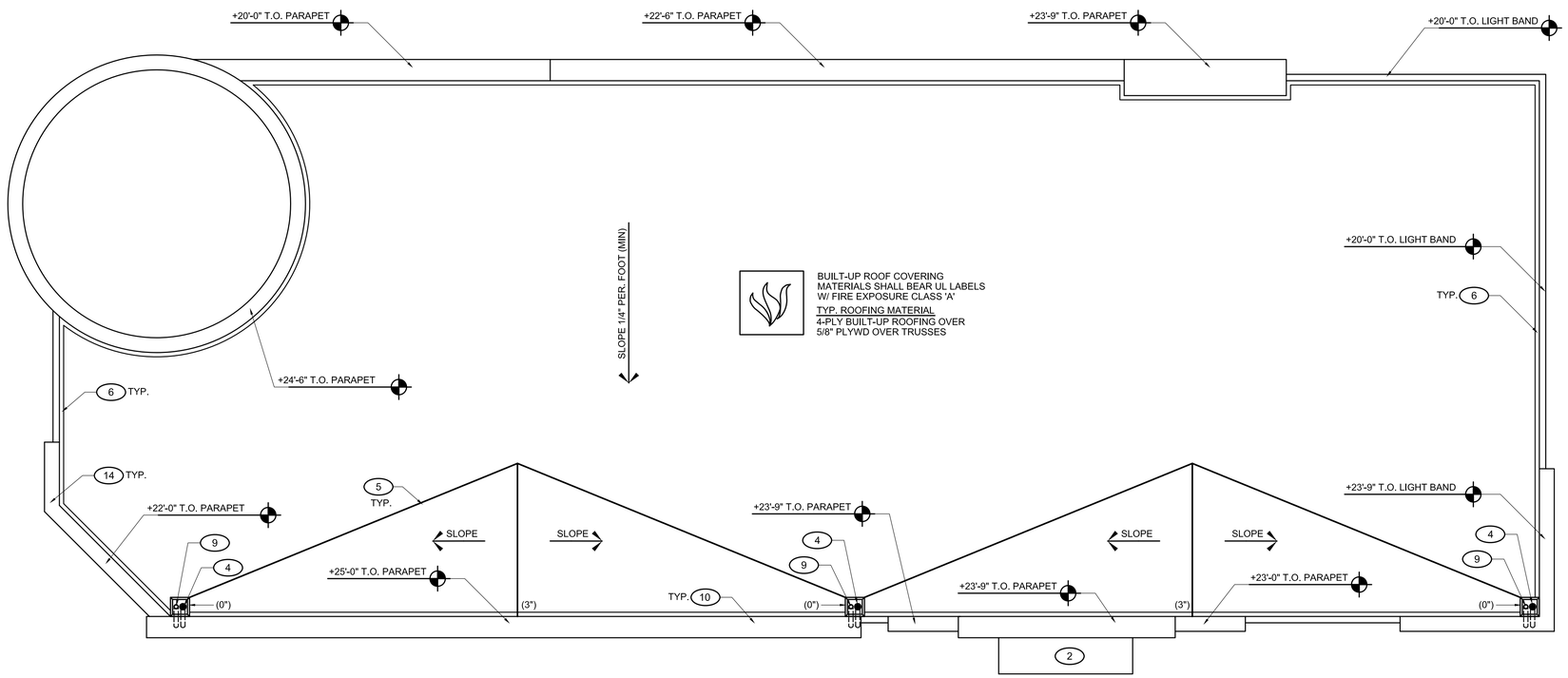

Milestone Associates
Imagineering
a California Corporation

1000 LINCOLN ROAD, SUITE H202
YUBA CITY, CALIFORNIA 95991

TEL: 530-755-4700
FAX: 530-755-4567

JULIO J. TINAJERO
PROJECT MANAGER

STAMP:

SUBMITTAL DATE

PLANNING DEPT: .
BUILDING DEPT: .
PUBLIC WORKS: .
SURVEY: .

REVISIONS

No.	Description	Date

ROOF PLAN

76 & BURGER KING
COCHRANE COMMONS
1107 COCHRANE ROAD
MORGAN HILL, CA 95037
A.P.N. 728-37-024

DATE: 08-29-16
SCALE: 3/16" = 1'-0"
DRAFTER: STAFF
JOB NUMBER: 15-915

SHEET:
DD2.1

ROOF PLAN

3/16" = 1'-0" 1

ALL DRAWINGS AND WRITTEN MATERIAL APPEARING HEREIN CONSTITUTE THE ORIGINAL AND UNPUBLISHED WORK OF MILESTONE ASSOCIATES IMAGINEERING, INC., AND THE SAME MAY NOT BE DUPLICATED, USED OR DISCLOSED WITHOUT THE WRITTEN CONSENT OF MILESTONE ASSOCIATES IMAGINEERING, INC. ©2016 MILESTONE ASSOCIATES IMAGINEERING, INC. ALL RIGHTS RESERVED.

15-915-DD2.1-ROOF PLAN.DWG JT 08-29-16

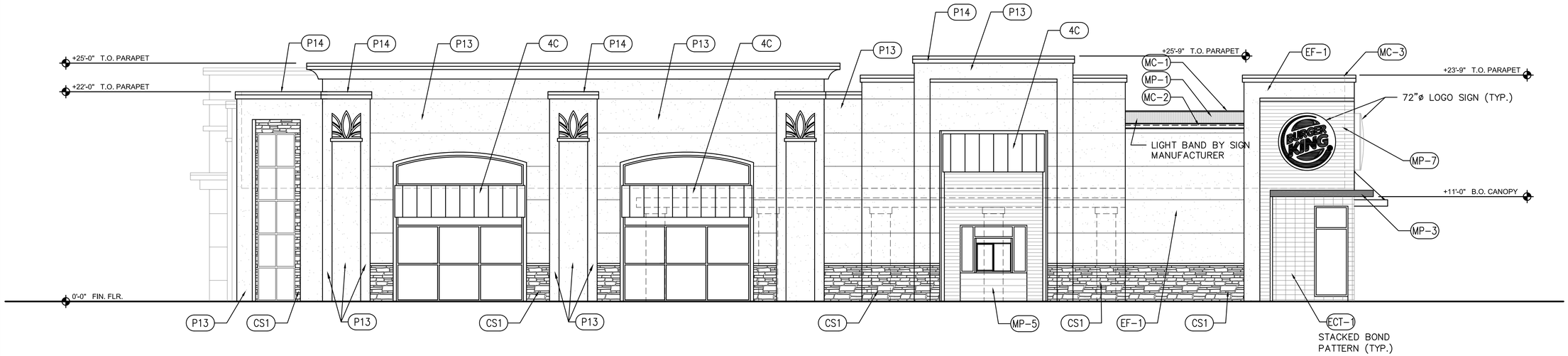

REAR ELEVATION (SOUTH ELEVATION) 3/16" = 1'-0" 2

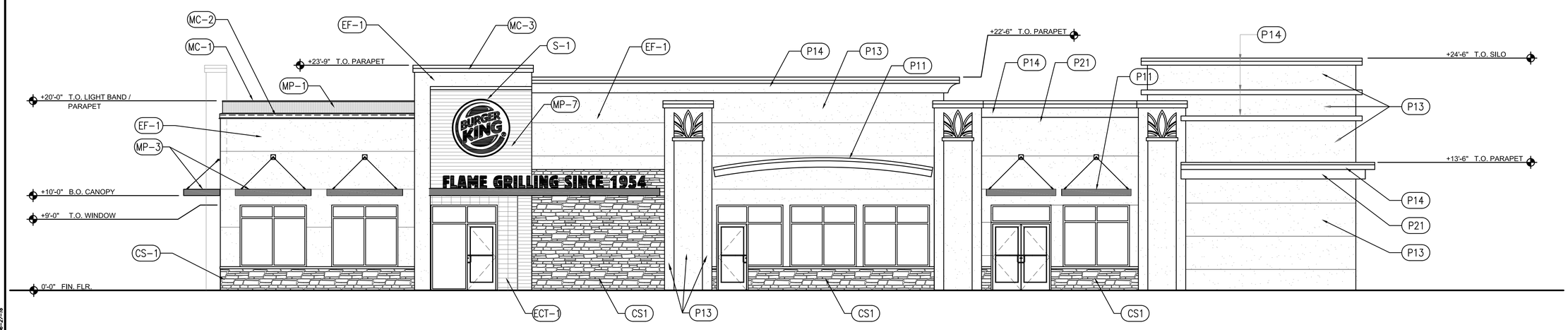

FRONT ELEVATION (NORTH ELEVATION) 3/16" = 1'-0" 1

ALL DRAWINGS AND WRITTEN MATERIAL APPEARING HEREIN CONSTITUTE THE ORIGINAL AND UNPUBLISHED WORK OF MILESTONE ASSOCIATES IMAGINEERING, INC., AND THE SAME MAY NOT BE DUPLICATED, USED OR DISCLOSED WITHOUT THE WRITTEN CONSENT OF MILESTONE ASSOCIATES IMAGINEERING, INC. ©2016 MILESTONE ASSOCIATES IMAGINEERING, INC. ALL RIGHTS RESERVED.

15-915-DD3.0-EXT ELEVATIONS.DWG JT 08-27-16

Milestone Associates
Imagineering
a California Corporation
1000 LINCOLN ROAD, SUITE H202
YUBA CITY, CALIFORNIA 95991
TEL: 530-755-4700
FAX: 530-755-4567

JULIO J. TINAJERO
PROJECT MANAGER

STAMP:

SUBMITTAL DATE

PLANNING DEPT:	.
BUILDING DEPT:	.
PUBLIC WORKS:	.
SURVEY:	.

REVISIONS

No.	Description	Date

EXTERIOR ELEVATIONS

76 & BURGER KING
COCHRANE COMMONS
1107 COCHRANE ROAD
MORGAN HILL, CA 95037
A.P.N. 728-37-024

DATE:	08-29-16
SCALE:	3/16" = 1'-0"
DRAFTER:	STAFF
JOB NUMBER:	15-915

SHEET:

DD3.0

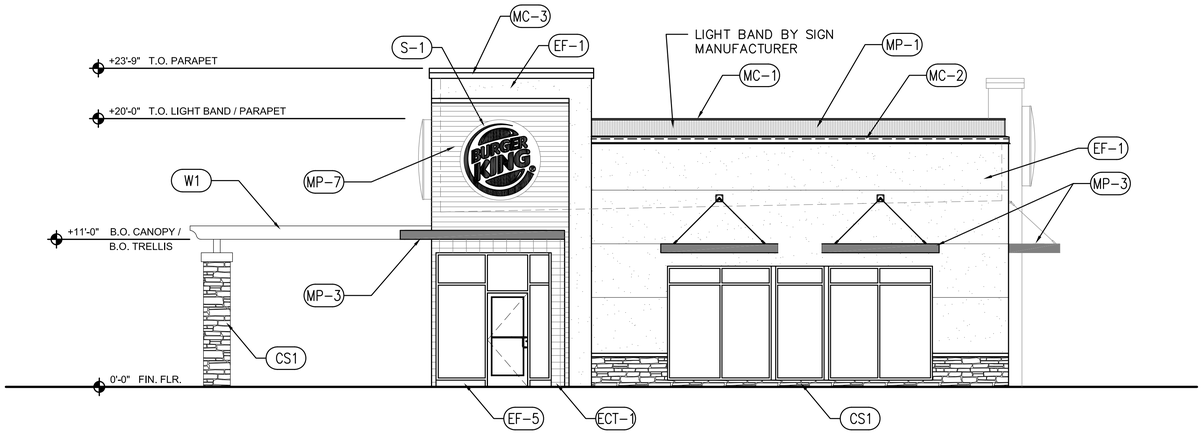

LEFT ELEVATION (EAST ELEVATION) 3/16" = 1'-0" 2

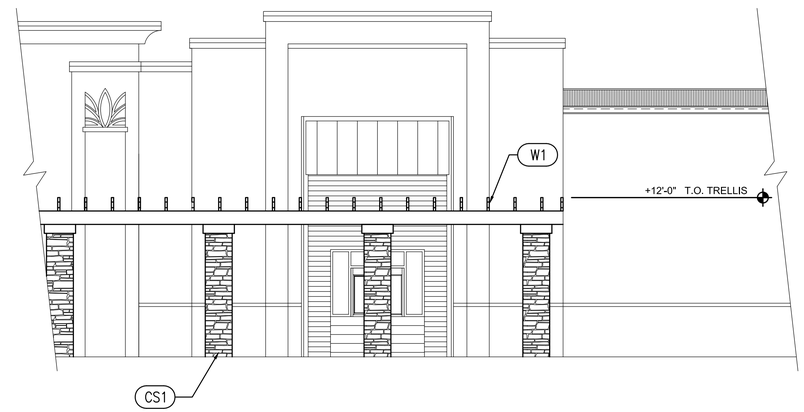

TRELLIS ELEVATION AT PICK-UP WINDOW 3/16" = 1'-0" 3

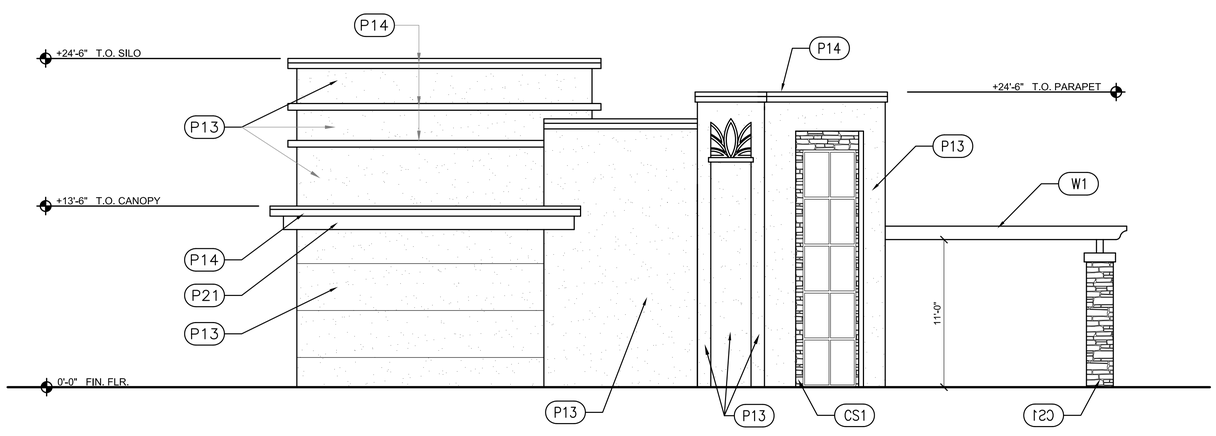

RIGHT ELEVATION (WEST ELEVATION) 3/16" = 1'-0" 1

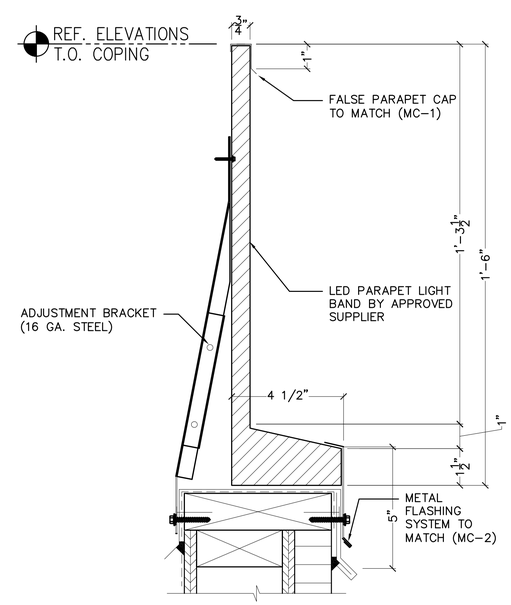

A **PARAPET LIGHT BAND DETAIL**

SCALE: 3" = 1'-0"

Milestone Associates
Imagineering
a California Corporation

1000 LINCOLN ROAD, SUITE H202
YUBA CITY, CALIFORNIA 95991

TEL: 530-755-4700
FAX: 530-755-4567

JULIO J. TINAJERO
PROJECT MANAGER

STAMP:

SUBMITTAL DATE

PLANNING DEPT: .
BUILDING DEPT: .
PUBLIC WORKS: .
SURVEY: .

REVISIONS

No.	Description	Date

EXTERIOR ELIVATIONS

76 & BURGER KING
COCHRANE COMMONS
1107 COCHRANE ROAD
MORGAN HILL, CA 95037
A.P.N. 728-37-024

DATE: 08-29-16
SCALE: 3/16" = 1'-0"
DRAFTER: STAFF
JOB NUMBER: 15-915

SHEET:
DD3.1

15-915-DD3.1-EXT ELEVATIONS.DWG JT 08-29-16

ALL DRAWINGS AND WRITTEN MATERIAL APPEARING HEREIN CONSTITUTE THE ORIGINAL AND UNPUBLISHED WORK OF MILESTONE ASSOCIATES IMAGINEERING, INC., AND THE SAME MAY NOT BE DUPLICATED, USED OR DISCLOSED WITHOUT THE WRITTEN CONSENT OF MILESTONE ASSOCIATES IMAGINEERING, INC. ©2016 MILESTONE ASSOCIATES IMAGINEERING, INC. ALL RIGHTS RESERVED.

BURGER KING- 20/20 EXTERIOR

EXTERIOR MATERIALS & FINISH SCHEDULE

7/6/2015

CODE	MATERIAL	LOCATION	MANUFACTURER	DESCRIPTION: PRODUCT	DESCRIPTION: COLOR	DESCRIPTION: DIMENSION	ADDITIONAL INFORMATION
EB-1	EXTERIOR BRICK	GENERAL	EVOLUTION BRICK	MOD / QS TUMBLED (FULL BRICK)	OLDE HILLSBORO		CONTACT: GABE POWERS (502) 558-4612
				(THIN BRICK)	SIERRA TUMBLED		**NOTE: USE WITH EGR-1**
			PINE HALL BRICK	FACE BRICK	OLD IRVINGTON O/S		CONTACT: THERESA BEANE (800) 334-8689 TBEANE@PINEHALLBRICK.COM **NOTE: USE WITH EGR-1**
			H.C. MUDDOX BRICK	THIN BRICK	BK WEST COAST BLEND		CONTACT: SUNUP MATHEW (916) 708-9306 **NOTE: USE WITH EGR-1**
EB-1A (ALTERNATE)	EXTERIOR FINISH FIBER CEMENT BRICK PANELS	GENERAL	NICHIHA FIBER CEMENT	NICHIHA CANYON BRICK PANELS	UNFINISHED - MUST BE PAINTED TO MATCH EP-4	18" X 6'	**PERMISSIBLE ON REMODELS ONLY** Contact: Chris Tate 770-805-9466 or 404-538-1261 Email: Ctate@nichiha.com **INSTALL PER MANUFACTURER'S SPECIFICATIONS**
ECT-1	EXTERIOR CERAMIC TILE	ACCENT AT BUILDING FRONT	DALTILE	NATURAL HUES	#QH77 SCARLET STACKED BOND PATTERN	6" X 12"	CONTACT: NATIONAL ACCOUNTS AT (877) 556-5728 EMAIL: NATIONAL.ACCOUNTS@DALTILE.COM **NOTE: USE WITH EGR-2**
ECT-2	EXTERIOR CERAMIC TILE	ACCENT AT BUILDING FRONT		NATURAL HUES	#QH77 SCARLET Q1665 BULLNOSE	6" X 6"	
EF-1	EXTERIOR FINISH - STUCCO, STO, FIBER CEMENT SIDING PANELS	GENERAL	STO OR APPROVED EQUAL	STO POWERWALL STUCCO SYSTEM TEXTURE :FINE SAND OR STO THERM CI EIFS SYSTEM	COLOR TO MATCH EP-2 PPG "CAMEL TAN"		CONTACT: TIM SALERNO AT STO CORP (407) 466-5371
			NICHIHA FIBER CEMENT	NICHIHA ARCHITECTURALBLOCK - LARGE	PREPAINTED TO MATCH EP-2 - PPG "CAMEL TAN" STACKED BOND PATTERN	18" X 6'	**PERMISSIBLE ON REMODELS ONLY** Contact: Chris Tate 770-805-9466 or 404-538-1261 Email: Ctate@nichiha.com **INSTALL PER MANUFACTURER'S SPECIFICATIONS**
EF-2	EXTERIOR FINISH STUCCO	GENERAL	STO OR APPROVED EQUAL	STO POWERWALL STUCCO SYSTEM OR STO THERM CI EIFS SYSTEM	STUCCO OR STO MUST BE PAINTED TO MATCH EP-5 PPG "DEEP ONYX"		CONTACT: TIM SALERNO AT STO CORP (407) 466-5371
EF-4	EXTERIOR FINISH STUCCO	GENERAL			COLOR TO MATCH EP-4 PPG "MONTEREY CLIFFS"		
EF-5	EXTERIOR FINISH STUCCO	GENERAL			COLOR TO MATCH EP-3 PPG "AMAZING"		
EF-7	EXTERIOR FINISH FIBER CEMENT SIDING	EXTERIOR SIGN ARCHONS	NICHIHA FIBER CEMENT	NICHIHA BOARD 7-1/4" SMOOTH FINISH WITH 6-1/4" EXPOSURE TRIM IS 1 X 3,5" NICHITRIM	PAINT WITH SEMI-GLOSS PAINT - COLOR TO MATCH EP-5 PPG "DEEP ONYX"		**NOT PERMISSIBLE ON "ENHANCED" ELEVATION OPTION** CONTACT: Chris Tate 770-805-9466 or 404-538-1261 EMAIL: Ctate@nichiha.com **INSTALL PER MANUFACTURER'S SPECIFICATIONS**
			JAMES HARDIE	HARDIPLANK LAP SIDING 7-1/4" SMOOTH FINISH WITH 6-1/4" EXPOSURE TRIM IS 1 X 6 DIMENSIONAL HARDIPLANK LUMBER RIPPED IN HALF			**NOT PERMISSIBLE ON "ENHANCED" ELEVATION OPTION INSTALL PER MANUFACTURER'S SPECIFICATIONS**
EF-8	EXTERIOR FINISH STONE	EXTERIOR SIGN ARCHONS	BORAL STONE PRODUCTS	COUNTRY LEDGESTONE	BLACK RUNDLE		CONTACT: GENE GUETZOW AT BORAL STONE (262) 994-0273
EP-2	EXTERIOR PAINT	EXTERIOR GENERAL	PPG	**PRIMER:** 17-921 **PAINT:** 6-2045X1 SPEEDHIDE EXTERIOR SATIN LATEX	CAMEL TAN		Contact: RICK GARLIN, PPG CORPORATE NATIONAL ACCOUNTS MANAGER phone: (317) 318-5800 email: garlin@ppg.com
EP-3	EXTERIOR PAINT	EXTERIOR ACCENT		**PRIMER:** 17-921 **PAINT:** 3002-0500N EXTERIOR SPEEDHIDE SATIN LATEX	AMAZING		
EP-4	EXTERIOR PAINT	EXTERIOR WAINSCOT		**PRIMER:** 17-921 **PAINT:** 6-2045X1 EXTERIOR SPEEDHIDE SATIN LATEX	MONTERREY CLIFFS		
EP-5	EXTERIOR PAINT	EXTERIOR GENERAL		**PRIMER:** 17-921 **PAINT:** 6-2045X1 EXTERIOR SPEEDHIDE SATIN LATEX	DEEP ONYX		
EP-6	EXTERIOR PAINT	EXTERIOR ACCENT (For Metal Substrates Only)		**PRIMER:** 6-212 **PAINT:** 6-230 SPEEDHIDE 6-230 ALUMINUM LEAFING	BURGER KING SILVER		**NOTE: NOT FOR USE ON ROOFS FOR REMODELING.** SEE EP-6A & EP-6B
EP-6A	EXTERIOR PAINT	EXISTING MANSARD ROOFS, SHINGLES & BARREL TILE		**PRIMER:** 17-921 **PAINT:** 90-1110 PPG PITT-TECH ULTRA SATIN	GRIMMY'S GREY		**NOTE: FOR REMODELS ONLY**
EP-6B	EXTERIOR PAINT	EXISTING STANDING SEAM METAL ROOF		**PRIMER:** 90-712 **PAINT:** 90-1110 PPG PITT-TECH SATIN	MARCH WIND		**NOTE: FOR REMODELS ONLY**
EXT	EXTERIOR PAINT	POLES & SIGNS		**PRIMER:** 90-712 **PAINT:** 90-353 PPG PITT-TECH 90-533 BLACK GLOSS ACRYLIC	BLACK		
EGR-1	GROUT	BRICK	FLAMINGO-BRIXMENT	COLOR CEMENT	C-244/B-12		CONTACT: MIKE ROSE @ ESSROC (502) 741-3923 **NOTE: USE WITH EB-1 & EB-1A**
MC-1	METAL COPING	TOP OF LIGHT BAND WALL CAP	W.P. HICKMAN SYSTEMS, INC.	PERMA SNAP PLUS	A-30 SILVERSMITH		CONTACT: W.P. HICKMAN COMPANY (828)676-1700 WWW.WPH.COM
MC-2	METAL COPING	BELOW LIGHT BAND		PERMA SNAP PLUS	FACTORY FINISH TO MATCH PPG CAMEL TAN		CONTACT: W.P. HICKMAN COMPANY (828) 676-1700
MC-3	METAL COPING	TOP OF ARCHON		PERMA SNAP PLUS	FACTORY FINISH TO MATCH PPG DEEP ONYX		CONTACT: W.P. HICKMAN COMPANY (828) 676-1700
MP-1	CORRUGATED METAL	PARAPET BAND	LEKTRON *SEE APPROVED SIGN SUPPLIERS	LED LIGHT BAND	FACTORY FINISH TO MATCH EP-1	*SEE PLANS	PRODUCT INFORMATION: JOHN FITZWILSON AT LEKTRON (800) 634-4059 OR (918) 622-4978 EXT 302 Email: Jfitzwilson@lektroninc.com
MP-3	METAL CANOPY	ABOVE DOORS	*SEE APPROVED CANOPY SUPPLIERS	CUSTOM METAL CANOPY	COLOR: CLEAR ANODIZED	*SEE PLANS	
MP-4	METAL AWNING / SSM ROOFING	ABOVE WINDOWS / MANSARD ROOFING	FIRESTONE METAL PRODUCTS	STANDING SEAM METAL ROOF UC-4 PROFILE	SILVER METALLIC SR	*SEE PLANS	CONTACT: BRENNA ROMANI (317) 816-3206 OR (763) 587-1852
			BERRIDGE ROOFING METAL PRODUCTS	STANDING SEAM METAL ROOF CEE-LOCK	PREMIUM METALLIC - ZINC COTE	*SEE PLANS	CONTACT: TYLER HALL (210) 650-7047
MP-5	METAL PANEL	BELOW DRIVE THROUGH WINDOW	CENTRIA	CONCEPT SERIES CS200E	9946 SILVERSMITH		PRODUCT INFORMATION: JON SCHLOSSER AT CENTRIA (513) 793-9160 TO PURCHASE: JIM ABNER AT METALWORKS PLUS/BK (859) 442-5666
			MORIN	METAL PANEL XC-12	BRIGHT SILVER METALLIC		CONTACT: DANIEL DAVENPORT AT (800) 640-9501 Email: danield@morincorp.com
MP-7	CORRUGATED METAL PANELS	EXTERIOR SIGN ARCHONS	MORIN	METAL PANEL X-12	CS82544 RICH BLACK		CONTACT: DANIEL DAVENPORT AT (800) 640-9501 Email: danield@morincorp.com
			EXCEPTIONAL METALS	MASTERLINE 16 PANELS SIGNATURE 200	COAL BLACK		CONTACT: Elwood Newsome (800) 248-0280 x-2835 Email: emestimating@exceptionalmetals.com CONTACT: James Townsend (678) 982-6709 Email: jtownsend@exceptionalmetal.com

OTHER COLORS/FINISHES

4C	FABRIC AWNING:	PAINT FRAME GLOSS ENAMEL, TO MATCH CANVAS FABRIC BY SUNBRELLA.
	COLOR:	#4622 "TERRA COTTA"
CS1	CAST STONE:	AS MANUFACTURED BY SONOMA CAST STONE
	COLOR:	A26, "BARK"
CS2	CAST STONE TILE:	AS MANUFACTURED BY SIERRA CAST STONE
	COLOR:	
P11	ARCHITECTURAL METAL:	STEEL CHANNEL FRAME AWNING
	COLOR:	DEA 152, "DEEP CRIMSON" PAINT, AS MANUFACTURED BY DUNN EDWARDS PAINT
P13	CEMENT PLASTER:	SAND TROWELED FINISH. PAINT WITH ELASTOMERIC COATING.
	COLOR:	DE 6214, "PIGEON GRAY" PAINT, AS MANUFACTURED BY DUNN EDWARDS PAINT
P14	CEMENT PLASTER:	SAND TROWELED FINISH. PAINT WITH ELASTOMERIC COATING.
	COLOR:	DEW 393, "VIOLET CLUES" PAINT, AS MANUFACTURED BY DUNN EDWARDS PAINT
P21	CEMENT PLASTER:	SAND TROWELED FINISH. PAINT WITH ELASTOMERIC COATING.
	COLOR:	DE 6126, "STOCKHORSE" PAINT, AS MANUFACTURED BY DUNN EDWARDS PAINT
W1	WOOD TRELLIS:	PAINT WITH ELASTOMERIC COATING.
	COLOR:	DEA 152, "DEEP CRIMSON" PAINT, AS MANUFACTURED BY DUNN EDWARDS PAINT

Milestone Associates
Imagineering

1000 LINCOLN ROAD, SUITE H202
YUBA CITY, CALIFORNIA 95991

TEL: 530-755-4700
FAX: 530-755-4567

JULIO J. TINAJERO
PROJECT MANAGER

STAMP:

SUBMITTAL DATE

PLANNING DEPT: .
BUILDING DEPT: .
PUBLIC WORKS: .
SURVEY: .

REVISIONS

No.	Description	Date

EXTERIOR FINISH SCHEDULE

76 & BURGER KING
COCHRANE COMMONS
1107 COCHRANE ROAD
MORGAN HILL, CA 95037
A.P.N. 728-37-024

DATE: 08-29-16

SCALE:

DRAFTER: STAFF

JOB NUMBER: 15-915

SHEET:

DD3.2

15-915-003-EXT FINISH SCHEDULE JT 10-12-15

ALL DRAWINGS AND WRITTEN MATERIAL APPEARING HEREIN CONSTITUTE THE ORIGINAL AND UNPUBLISHED WORK OF MILESTONE ASSOCIATES IMAGINEERING, INC., AND THE SAME MAY NOT BE DUPLICATED, USED OR DISCLOSED WITHOUT THE WRITTEN CONSENT OF MILESTONE ASSOCIATES IMAGINEERING, INC. ©2016 MILESTONE ASSOCIATES IMAGINEERING, INC. ALL RIGHTS RESERVED.

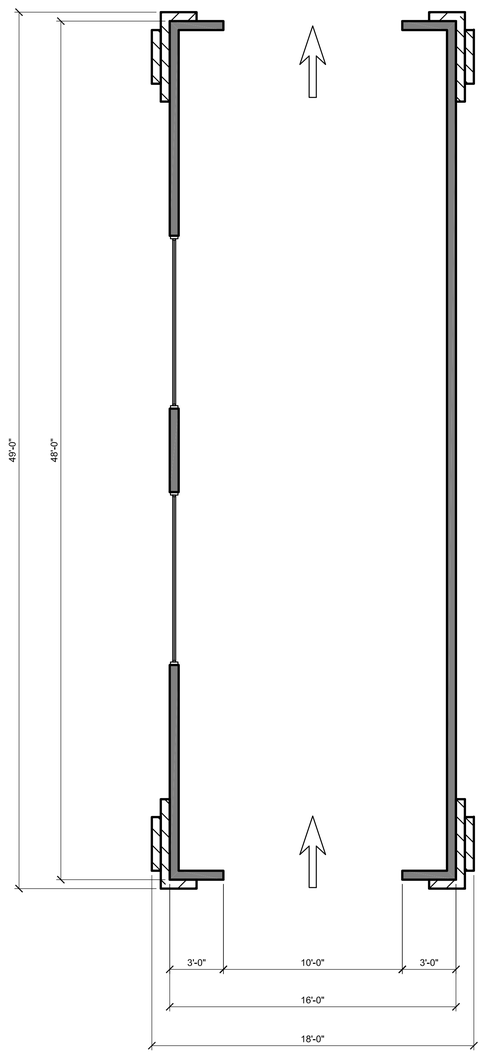

FLOOR PLAN (768 SF) 1/4" = 1'-0" | 1

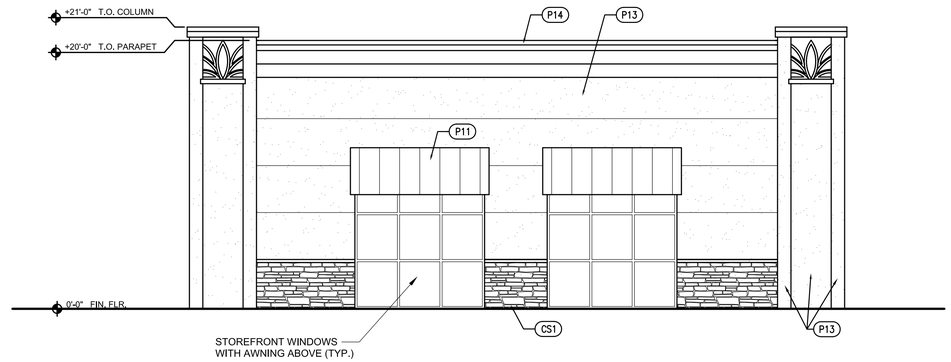

INTERIOR LOT ELEVATION (NORTH) 3/16" = 1'-0" | 2

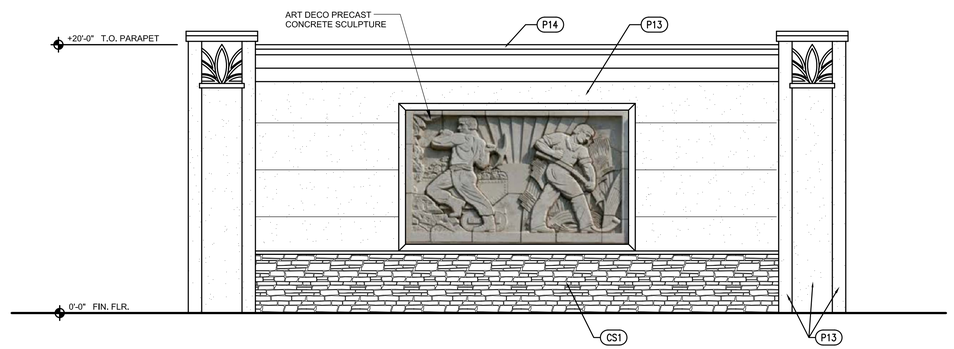

COCHRANE ROAD ELEVATION (SOUTH) 3/16" = 1'-0" | 3

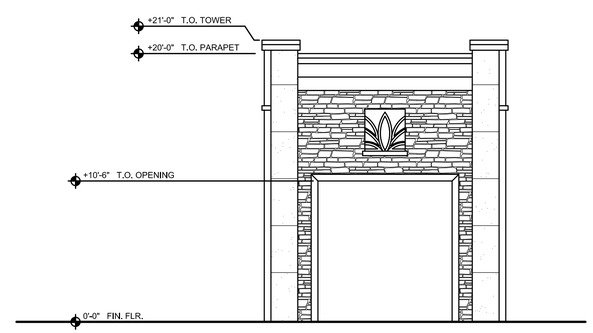

EAST & WEST ELEVATIONS 3/16" = 1'-0" | 4

Milestone Associates
Imagineering
a California Corporation
1000 LINCOLN ROAD, SUITE H202
YUBA CITY, CALIFORNIA 95991
TEL: 530-755-4700
FAX: 530-755-4567

JULIO J. TINAJERO
PROJECT MANAGER

STAMP:

SUBMITTAL DATE

PLANNING DEPT: .
BUILDING DEPT: .
PUBLIC WORKS: .
SURVEY: .

REVISIONS

No.	Description	Date

CARWASH
FLOOR PLAN & ELEVATIONS

76 & BURGER KING
COCHRANE COMMONS
1107 COCHRANE ROAD
MORGAN HILL, CA 95037
A.P.N. 728-37-024

DATE: 08-29-16
SCALE: AS SHOWN
DRAFTER: STAFF
JOB NUMBER: 15-915

SHEET:
DD4.0

15-915-DD4.0-CARWASHLONG JT 08-27-16

ALL DRAWINGS AND WRITTEN MATERIAL APPEARING HEREIN CONSTITUTE THE ORIGINAL AND UNPUBLISHED WORK OF MILESTONE ASSOCIATES IMAGINEERING, INC., AND THE SAME MAY NOT BE DUPLICATED, USED OR DISCLOSED WITHOUT THE WRITTEN CONSENT OF MILESTONE ASSOCIATES IMAGINEERING, INC. ©2016 MILESTONE ASSOCIATES IMAGINEERING, INC. ALL RIGHTS RESERVED.

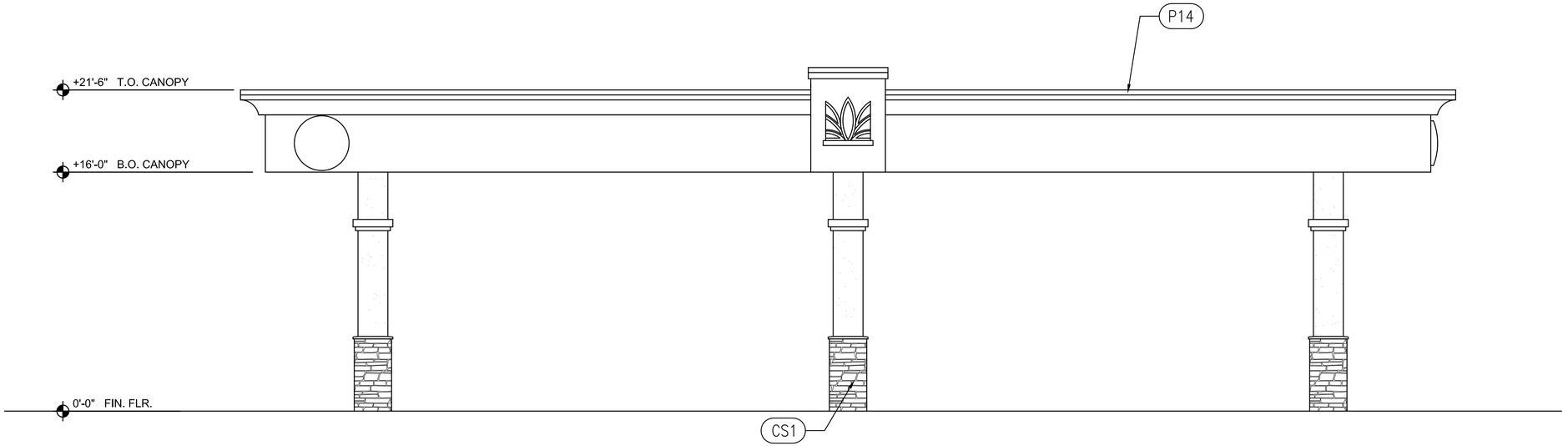

WEST AND EAST ELEVATION 3/16" = 1'-0" 2

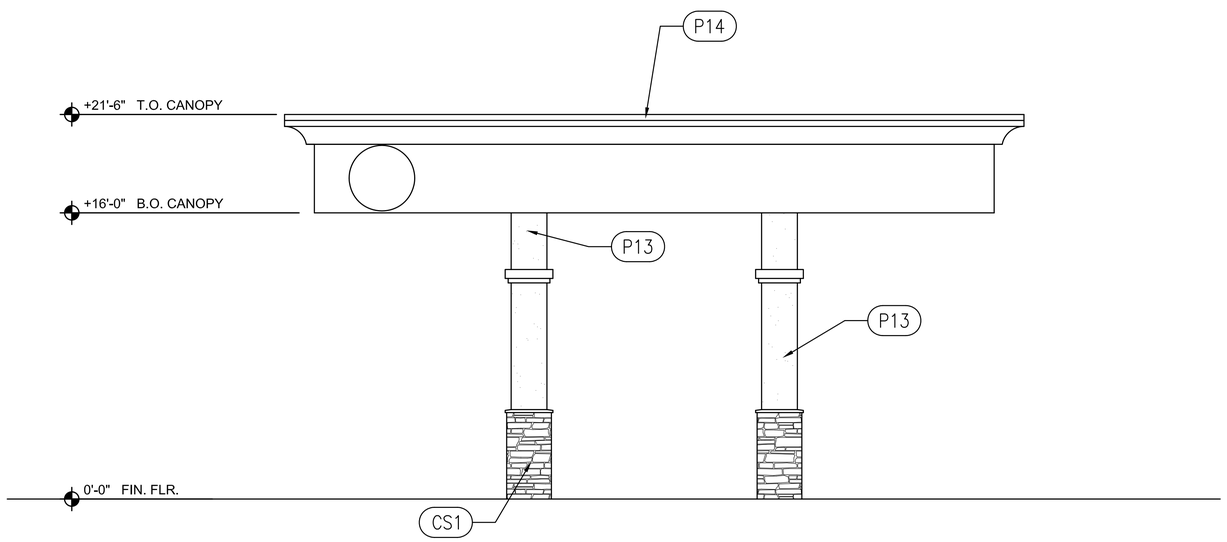

NORTH & SOUTH ELEVATION 3/16" = 1'-0" 1

Milestone Associates
Imagineering
a California Corporation
1000 LINCOLN ROAD, SUITE H202
YUBA CITY, CALIFORNIA 95991
TEL: 530-755-4700
FAX: 530-755-4567

JULIO J. TINAJERO
PROJECT MANAGER

STAMP:

SUBMITTAL DATE

PLANNING DEPT:	.
BUILDING DEPT:	.
PUBLIC WORKS:	.
SURVEY:	.

REVISIONS

No.	Description	Date

CANOPY ELEVATIONS

76 & BURGER KING
COCHRANE COMMONS
1107 COCHRANE ROAD
MORGAN HILL, CA 95037
A.P.N. 728-37-024

DATE: 08-29-16
SCALE: 3/16" = 1'-0"
DRAFTER: STAFF
JOB NUMBER: 15-915

SHEET:
DD5.0

15-915-DD5-CANOPIES JT 08-29-16

ALL DRAWINGS AND WRITTEN MATERIAL APPEARING HEREIN CONSTITUTE THE ORIGINAL AND UNPUBLISHED WORK OF MILESTONE ASSOCIATES IMAGINEERING, INC., AND THE SAME MAY NOT BE DUPLICATED, USED OR DISCLOSED WITHOUT THE WRITTEN CONSENT OF MILESTONE ASSOCIATES IMAGINEERING, INC. ©2016 MILESTONE ASSOCIATES IMAGINEERING, INC. ALL RIGHTS RESERVED.

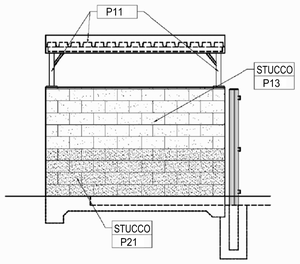

1 LEFT-SIDE ELEVATION
SCALE: 1/4" = 1'-0"

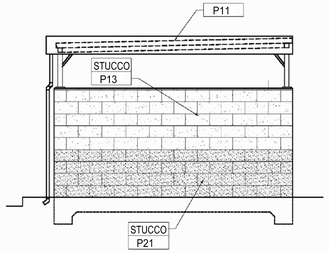

2 REAR ELEVATION
SCALE: 1/4" = 1'-0"

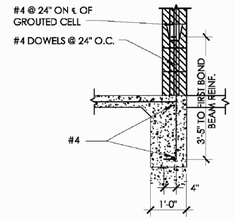

3 SECTION 2 - TYP.
SCALE: 1/2" = 1'-0"

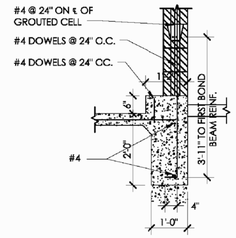

4 SECTION 2 - TYP.
SCALE: 1/2" = 1'-0"

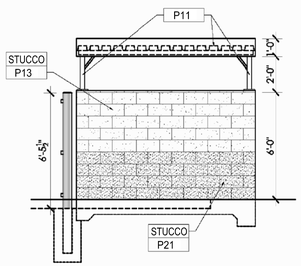

5 RIGHT-SIDE ELEVATION
SCALE: 1/4" = 1'-0"

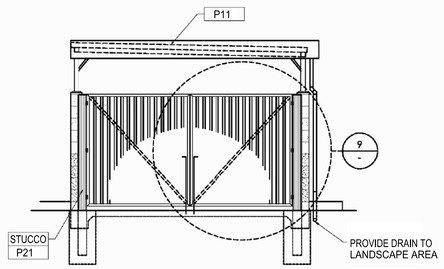

6 FRONT ELEVATION
SCALE: 1/4" = 1'-0"

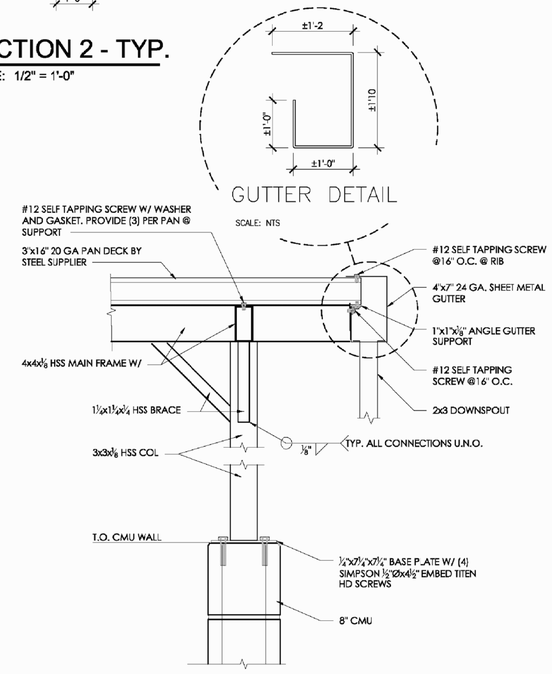

7 ROOF DETAIL
SCALE: 1/2" = 1'-0"

EXTERIOR FINISHES:

REFER TO EXTERIOR FINISH SCHEDULE ON SHEET DD3.2

EXTERIOR PAINTS:

REFER TO EXTERIOR FINISH SCHEDULE ON SHEET DD3.2

DESIGN STATEMENT

THE INTERIOR WALL SURFACES OF THE TRASH ENCLOSURE ARE TO BE SMOOTH, SEALED AND WASHABLE. APPLY ONE COAT EPOXY FILLER/SEALER; AND ONE COAT GLOSS POLYURETHANE.

CONCRETE MASONRY SPEC

RUNNING BOND CMU (TYP.), SMOOTH-FACE, STUCCO EXTERIOR, PAINTED HOLLOW CONCRETE MASONRY:
F'M = 1,350 psi UNITS SHALL BE LAID UP IN BED TYPE S MORTAR (F'C = 1,800 psi) AS FORMULATED IN U.B.C. REINFORCE WALLS AS SHOWN. FILL ALL CELLS CONTAINING REINFORCING WITH COARSE GROUT (F'C = 2,000 psi) AS FORMULATED IN 2013 CBC.

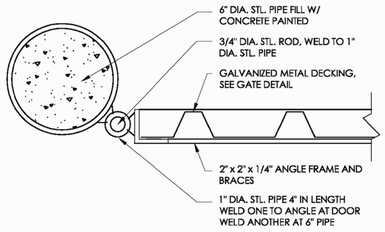

8 DUMPSTER GATE JAMB
SCALE: NOT TO SCALE

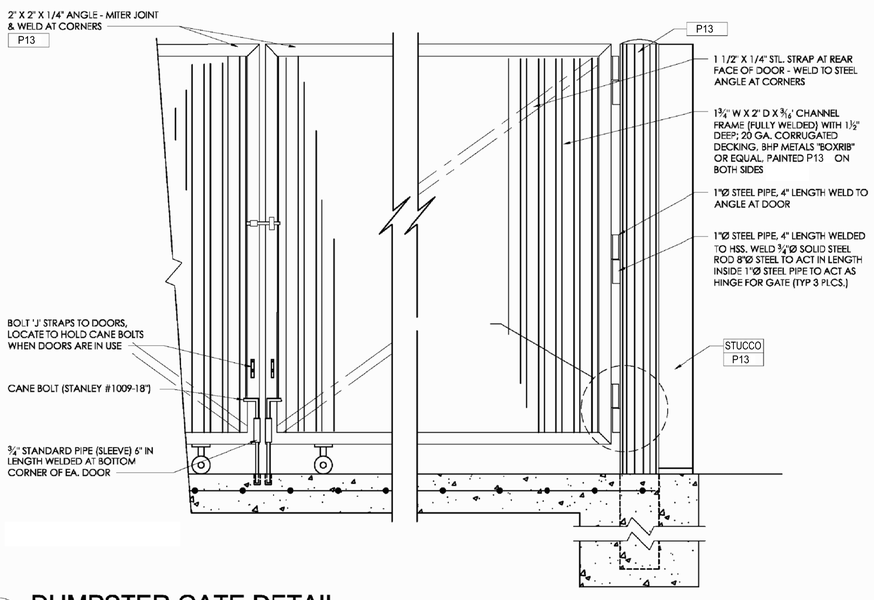

9 DUMPSTER GATE DETAIL
SCALE: 1/2" = 1'-0"

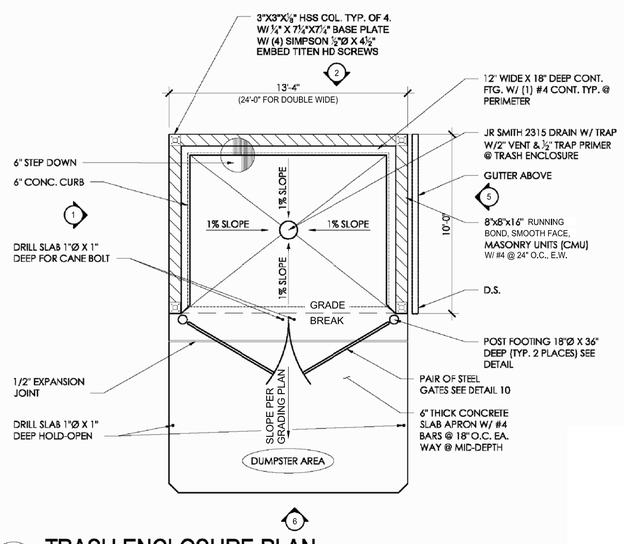

11 TRASH ENCLOSURE PLAN
SCALE: 1/4" = 1'-0"

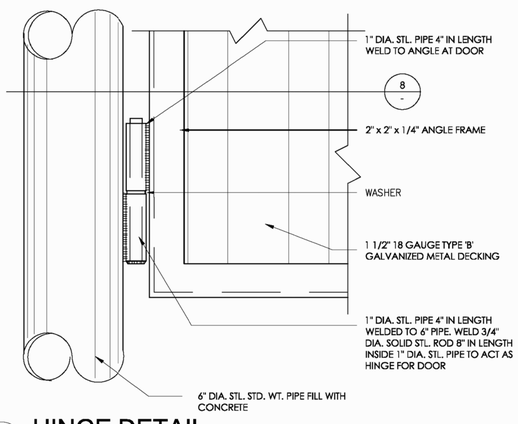

10 HINGE DETAIL
SCALE: NOT TO SCALE

Milestone Associates
Imagineering
a California Corporation
1000 LINCOLN ROAD, SUITE H202
YUBA CITY, CALIFORNIA 95991
TEL: 530-755-4700
FAX: 530-755-4567

JULIO J. TINAJERO
PROJECT MANAGER

STAMP:

SUBMITTAL DATE

PLANNING DEPT: .
BUILDING DEPT: .
PUBLIC WORKS: .
SURVEY: .

REVISIONS

No.	Description	Date

TRASH ENCLOSURE DETAILS

76 & BURGER KING
COCHRANE COMMONS
1107 COCHRANE ROAD
MORGAN HILL, CA 95037
A.P.N. 728-37-024

DATE: 08-29-16
SCALE: AS SHOWN
DRAFTER: STAFF
JOB NUMBER: 15-915

SHEET: DD6

15-915-006.0-TRASH ENCLOSURE.DWG JT 08-29-16

ALL DRAWINGS AND WRITTEN MATERIAL APPEARING HEREIN CONSTITUTE THE ORIGINAL AND UNPUBLISHED WORK OF MILESTONE ASSOCIATES IMAGINEERING, INC., AND THE SAME MAY NOT BE DUPLICATED, USED OR DISCLOSED WITHOUT THE WRITTEN CONSENT OF MILESTONE ASSOCIATES IMAGINEERING, INC. ©2016 MILESTONE ASSOCIATES IMAGINEERING, INC. ALL RIGHTS RESERVED.

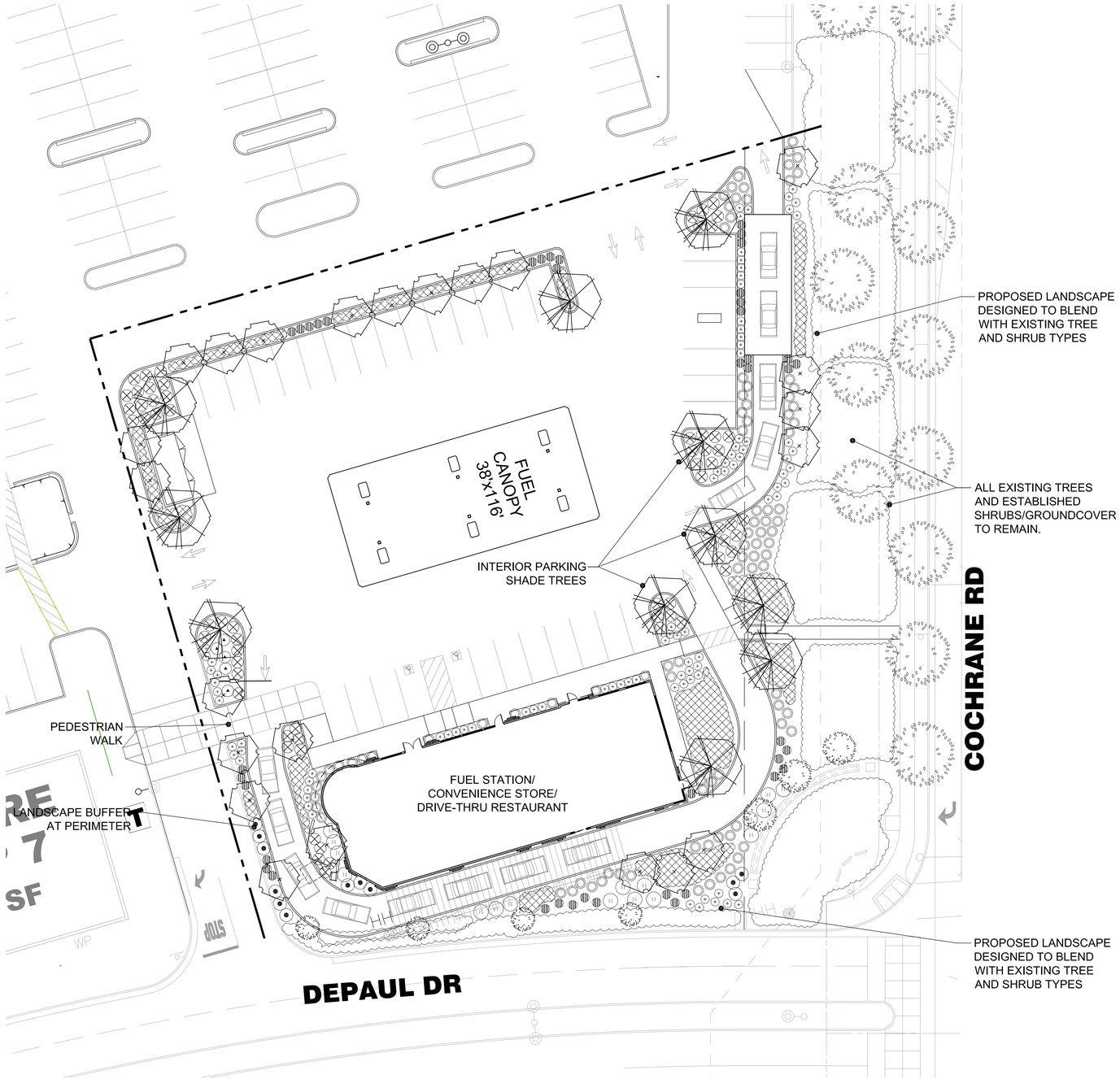

TREE PALLET

TREE SPECIES ABRV.	BOTANICAL NAME	COMMON NAME	SIZE	QTY	WATER USAGE
	PLATANUS ACERIFOLIA	SYCAMORE	15 GAL	7	MED
	LAGERSTROEMIA I. 'CATAWBA'	PURPLE CRAPE MYRTLE	15 GAL	10	LOW

SHRUB PALLET

SHRUB SPECIES ABRV.	BOTANICAL NAME	COMMON NAME	SIZE	QTY	
CP	COLEONEMA PULCHRUM (DIOSMA)	PINK BREATH OF HEAVEN	5 GAL	7	MED
HH	HEMEROCALLIS H. 'ORANGE CRUSH'	ORANGE DAYLILY	5 GAL	22	MED
ND	NANDINA D. 'HARBOUR DWARF'	SPREADING DWARF HEAVENLY BAMBOO	5 GAL	43	LOW
PM	PHORMIUM H. 'MAORI QUEEN'	GREEN/RED N.Z. FLAX	5 GAL	9	LOW
PT	PHORMIUM H. 'TOM THUMB'	GREEN DWARF N.Z. FLAX	5 GAL	31	LOW
RC	RHAPHIOLEPIS I. 'CLARA'	CLARA INDIAN HAWTORN	5 GAL	5	LOW
RX	ROSA X.	CARPET ROSE - AMBER G.C. ROSE	5 GAL	18	MED

GROUNDCOVER SPECIES

SYM.	BOTANICAL NAME	COMMON NAME	SIZE	SPACING	
	PYRACANTHA HYBRID 'RUBY MOUND'	GROUNDCOVER PYRACANTHA	1 GAL	60" O.C.	MED

EXISTING SHRUBS & TREES TO REMAIN

SYM.	BOTANICAL NAME	COMMON NAME	SIZE
	EXISTING SHRUBS AND TREES TO REMAIN		

NOTES: (ALL CODE/REQUIREMENTS WILL BE INCORPORATED TO CONSTRUCTION DOCUMENTS.)

PLANTINGS SHALL BE HYDRO-ZONED IN GROUPS OF LIKE WATER USAGE FOR MAXIMUM IRRIGATION EFFICIENCY AND WATER CONSERVATION. ALL LANDSCAPING SHALL BE IRRIGATED BY AN AUTOMATICE DRIP IRRIGATION SYSTEM IN COMPLIANCE WITH THE STATE OF CALIFORNIA, CITY OF MORGAN HILL ZONING CODE (§18.73 ET. SEQ.) AND THE CITY OF MORGAN HILL LANDSCAPE COMMERCIAL DESIGN GUIDELINES.

LANDSCAPING SHALL PROVIDE SCREENING FOR UNATTRACTIVE / UNSIGHTLY SERVICE AREAS AND SERVE AS A BUFFER BETWEEN NEIGHBORING USES. ALL LANDSCAPE AREAS SHALL BE PROVIDED WITH AUTOMATIC IRRIGATION SYSTEMS. PURSUANT TO THE MORGAN HILL LANDSCAPE COMMERCIAL DESIGN GUIDELINES, LANDSCAPE SHALL BE PROVIDED IN A MINIMUM OF 10% OF THE GROSS AREA OF PARKING LOTS, WHERE POSSIBLE. LANDSCAPE IRRIGATION REQUIREMENTS WILL BE COMPLIANT WITH ZONING CODE §18.73 ET SEQ. - WATER CONSERVATION IN LANDSCAPING. IRRIGATION SYSTEMS SHALL BE DESIGNED USING WATER CONSERVATION ELEMENTS SUCH AS: AUTOMATIC CONTROLLER, DRIP IRRIGATION, AND MATCHED PRECIPITATION SPRAY HEADS.

CONSTRUCTION DOCUMENTS SHALL INCLUDE MINIMUM 15 GALLON TREES, AND 5 GALLON SHRUBS. CONSTRUCTION DOCUMENTS WILL SPECIFY ROOT BARRIERS ON ALL TREES PLANTED WITHIN 5' OR CLOSER TO ANY HARDSCAPE ELEMENT. TREES SHALL BE PLANTED ADJACENT TO STRUCTURES ON-SITE, ONE TREE FOR EACH THIRTY LINEAR FEET OF THE COMBINED LENGTH OF THE REAR AND BOTH SIDE WALL DIMENSIONS OF THE STRUCTURE. SCREENING LANDSCAPE WILL BE OF THE TYPE THAT WILL PROVIDE A SCREEN YEAR-ROUND. ALL TREES SHALL BE PLANTED SIX FEET (6') OR GREATER FROM UNDERGROUND UTILITIES.

**THIS PRELIMINARY LANDSCAPE PLAN IS NOT FOR CONSTRUCTION, AND THE PLANTS PROPOSED HEREIN ARE SUBJECT TO CHANGE WHEN CONSTRUCTION DOCUMENTS ARE PROVIDED AND/OR APPROVED..

N

SCALE: 1" = 20'-0"

0' 10' 20' 30' 40'

PRELIMINARY LANDSCAPE PLAN
NOT FOR CONSTRUCTION

Milestone Associates
Imagineering
1000 LINCOLN ROAD, SUITE H202
YUBA CITY, CALIFORNIA 95991
TEL: 530-755-4700
FAX: 530-755-4567
JULIO J. TINAJERO PROJECT MANAGER
CHRIS OLIVEIRA, P.E. STRUCTURAL ENGINEERING

WPLA
WATKINS PLANNING & LANDSCAPE ARCHITECTURE
ERIK WATKINS CA RLA #5753
PO BOX 2285 CARMICHAEL, CA 95609 (707) 628-5326

STAMP: LICENSED LANDSCAPE ARCHITECT ERIK WATKINS NO 5753 PRELIMINARY Renewal Date Date STATE OF CALIFORNIA

SUBMITTAL DATE

PLANNING DEPT: .
BUILDING DEPT: .
PUBLIC WORKS: .
SURVEY: .

REVISIONS

No.	Description	Date

PRELIMINARY LANDSCAPE PLAN

76 & BURGER KING
COCHRANE COMMONS
SHOPPING CENTER – PAD "K"
COCHRANE ROAD & HIGHWAY 101
MORGAN HILL, CA 95037

DATE: 07/27/2016
SCALE: 1" = 20'-0"
DRAFTER: STAFF
JOB NUMBER: 1507
SHEET: PRELIMINARY LANDSCAPE PLAN

ALL DRAWINGS AND WRITTEN MATERIAL APPEARING HEREIN CONSTITUTE THE ORIGINAL AND UNPUBLISHED WORK OF WATKINS PLANNING & LANDSCAPE ARCHITECTURE (WPLA) AND THE SAME MAY NOT BE DUPLICATED, USED OR DISCLOSED WITHOUT THE WRITTEN CONSENT OF WPLA. ©2016 WPLA ALL RIGHTS RESERVED.

(TRELLIS NOT SHOWN FOR CLARITY)

WEST ELEVATION

EAST ELEVATION

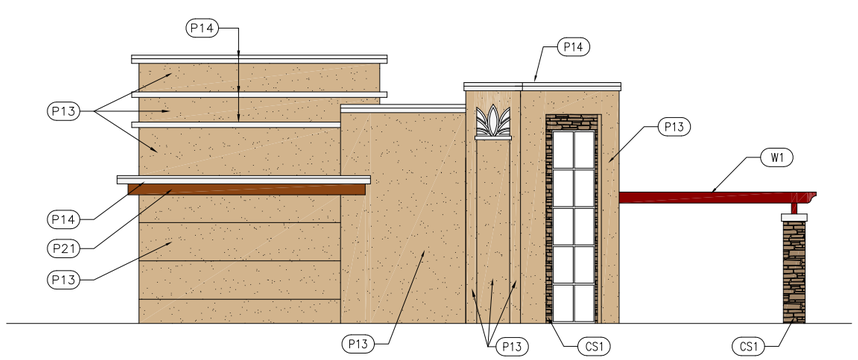

NORTH ELEVATION

SOUTH ELEVATION

EXTERIOR COLOR SCHEDULE

ECT-1	#QH77 "SCARLET"
EF-1, MC-2	#6-2045X1 "CAMEL TAN"
MC-1	A-30 "SILVERSMITH"
MP-3	CLEAR ANODIZED
MP-7	COAL BLACK
4C	"TERRA COTTA"
CS-1	A26 "BARK"
P11, W1	DEA "DEEP CRIMSON"
P13	DE 6214 "PIGEON GRAY"
P14	DEW 393 "VIOLET CLUES"
P21	DE 6126 "STOCKHORSE"

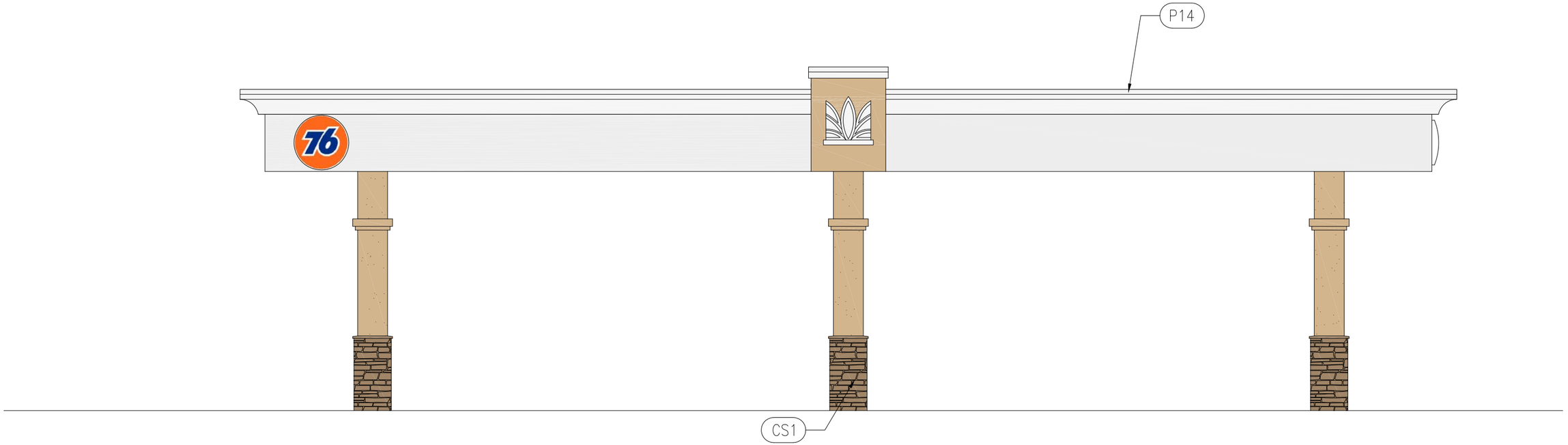

EAST / WEST ELEVATION

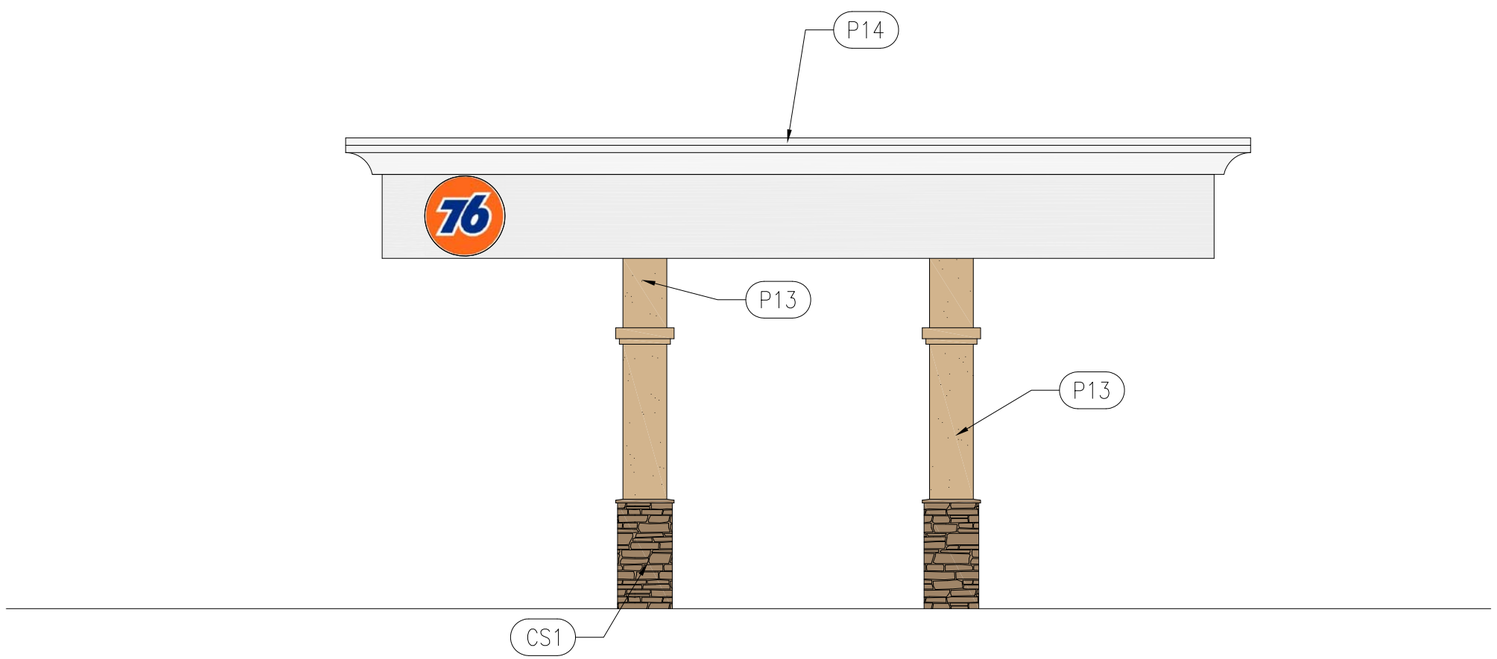

NORTH / SOUTH ELEVATION

EXTERIOR COLOR SCHEDULE

CS-1
A26 "BARK"

P13
DE 6214 "PIGEON GRAY"

P14
DEW 393 "VIOLET CLUES"

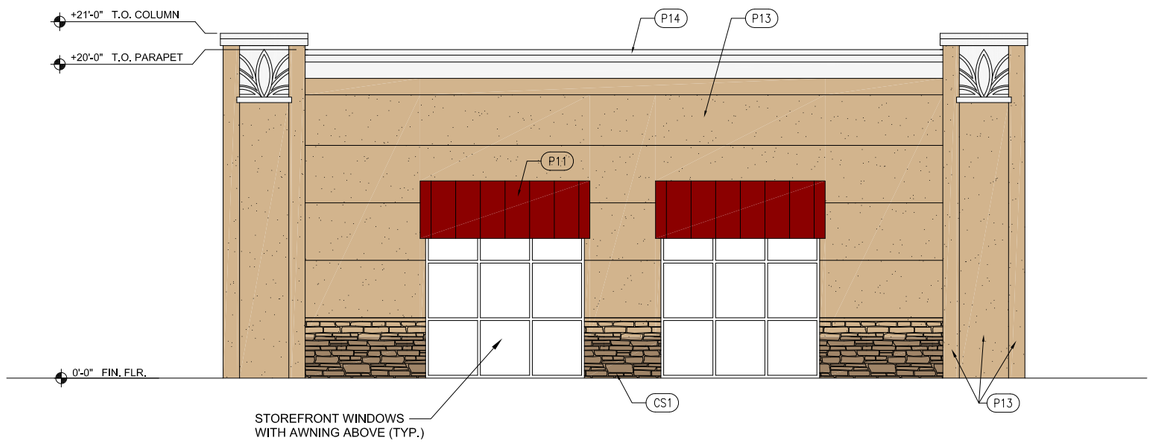

NORTH ELEVATION

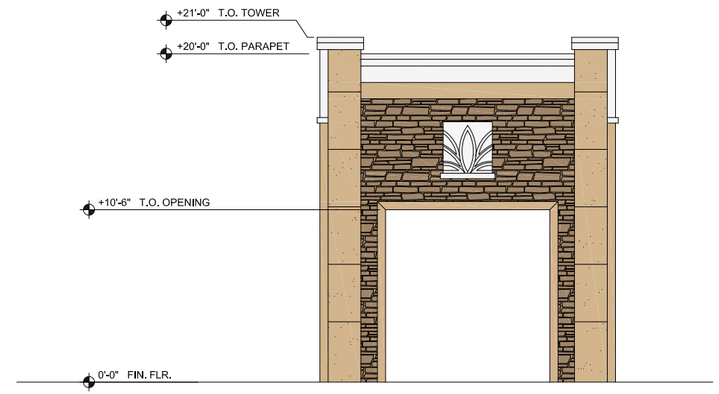

EAST / WEST ELEVATION

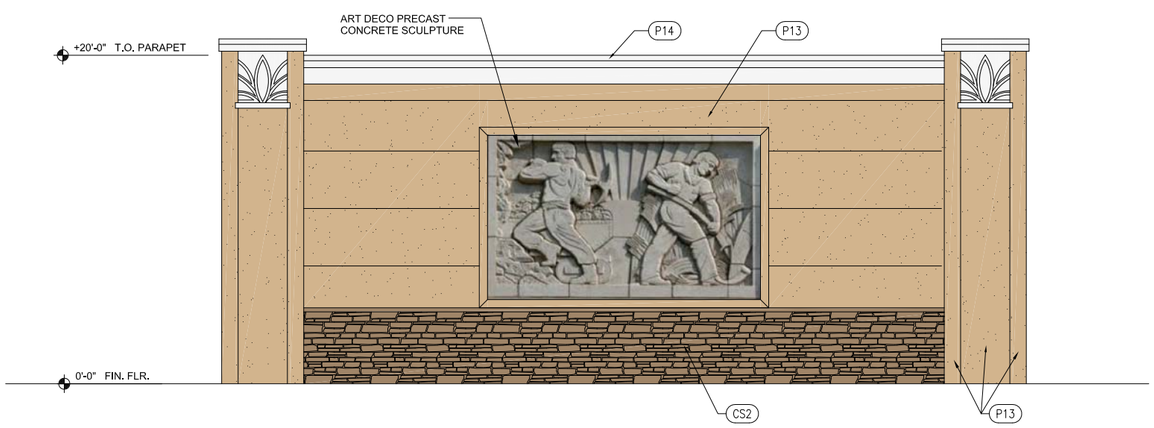

SOUTH ELEVATION

EXTERIOR COLOR SCHEDULE

CS-1
A26 "BARK"

P11, W1
DEA "DEEP CRIMSON"

P13
DE 6214 "PIGEON GRAY"

P14
DEW 393 "VIOLET CLUES"